	5 YR INV	SLD REV	BMP	EMP	INV	SLD REV
DATE	06/27/2011	07/12/2011	0.000	1.102	07/01/2013 URS	07/11/2013 URS
BY	URS	URS				

FLORIDA DEPARTMENT OF TRANSPORTATION

STRAIGHT LINE DIAGRAM OF ROAD INVENTORY

SECTION STATUS	INT. or US ROUTE NO.	STATE ROAD NO.	COUNTY	DISTRICT	ROADWAY ID	SHEET NO:
02	I 75	SR 93	MIAMI-DADE	06	87075000	1 OF 2

0.0 — 1.0

MIAMI - DADE COUNTY

ROADWAY FEATURES

0.000 INSIDE URBAN, OUTSIDE CITY
MIAMI
I-75
SR 93
I 75
FRONTAGE RD 87075702
ON RAMP 87075603
RAMP 87260322
2500
Exit-001AB
SR 826/ PALMETTO EXPY
826
0.164 A
0.189
OFF RAMP 87075527
0.349 A
ON RAMP 87075616
OFF RAMP 302/EXIT 1B A 0.554
FRONTAGE RD 87075704
W 28 AVE
W 28 AVE
FRONTAGE RD 87075703
1.291 A
ON RAMP 87075601
TRUMPET
Exit-002
E END OF BR OVR 826
2-QUADRANT CLOVERLEAF
ON RAMP 87075304 A 0.256
0.544 A
PALMETTO FRONTAGE RD
NW 87 AVE/
NW 87 AVE/
1.146 A
OFF RAMP 600/EXIT 2
PALMETTO FRONTAGE RD
OFF RAMP 87075600

GPS COORDINATES
25°54' 01" N
80° 19' 25" W

LANE WIDTHS ARE AVERAGED

0.000
322.0' - 36.0'L+24.0'R
3 - 12.0'L + 2 - 12.0'R RDWY
245.0 OTHER W/ GRD MED
10.0' WARN INSHLD I - LT
7.0' PVD INSHLD I - RT
3.0' VG INSHLD2 - RT
4.0' PVD SHLD I - LT
10.0' WARN SHLD I - RT
3.0' VG SHLD2 - LT

0.256
333.0' - 36.0'L+24.0'R
3 - 12.0'L + 2 - 12.0'R RDWY
245.0 LWN W/ GRD MED
10.0' WARN INSHLD I - LT
20.0' PVD INSHLD I - RT
20.0' PVD SHLD I - LT
6.0' PVD SHLD I - RT
2.0' LWN SHLD2 - LT

0.445
339.0' - 36.0'L+24.0'R
3 - 12.0'L + 2 - 12.0'R RDWY
245.0 LWN W/ GRD MED
10.0' WARN INSHLD I - LT
20.0' PVD INSHLD I - RT
20.0' PVD SHLD I - LT
12.0' WARN SHLD I - RT
2.0' LWN SHLD2 - LT

0.544
163.0' - 36.0'L+24.0'R
3 - 12.0'L + 2 - 12.0'R RDWY
81.0 LWN W/ GRD MED
2 - 10.0' WARN INSHLD I
10.0' PVD SHLD I - LT
12.0' WARN SHLD I - RT

0.759
210.0' - 36.0'L+48.0'R
3 - 12.0'L + 4 - 12.0'R RDWY
81.0 LWN W/ GRD MED
2 - 10.0' WARN INSHLD I
10.0' WARN SHLD I - LT
11.0' WARN SHLD I - RT
2 - 12.0' LWN SHLD2

1.102
227.0' - 96.0'
8 - 12.0' RDWY
81.0 LWN W/ GRD MED
2 - 10.0' WARN INSHLD I
15.0' PVD SHLD I - LT
11.0' WARN SHLD I - RT
2 - 12.0' LWN SHLD2

1.291
311.0' - 96.0'
8 - 12.0' RDWY
170.0 LWN W/ GRD MED
2 - 10.0' WARN INSHLD I
10.0' WARN SHLD I - LT
11.0' WARN SHLD I - RT
2 - 12.0' LWN SHLD2

1.398
300.0' - 96.0'
8 - 12.0' RDWY
170.0 LWN W/ GRD MED
2 - 10.0' WARN INSHLD I
10.0' WARN SHLD I - LT
12.0' WARN SHLD I - RT
12.0' LWN SHLD2 - LT

ROADWAY COMPOSITION

0.000 08/FC-0 — 0.076 28/FC-5
0.000 08/FC-0 — 0.076 28/FC-5

HORIZONTAL ALIGNMENT

B=S64°31'44"W
PC=0.418 PI=0.467 PT=0.516 Δ=9°53'46.00" D=1°55'
PC=0.516 PI=0.592 PT=0.667 Δ=14°47'43.00" D=1°51'
B=S89°41'52"W
PC=1.198 PI=1.545 PT=1.751 Δ=87°40'58.00" D=3°0'

STRUCTURE DESCRIPTION

0.000 #0646 401.3' BR 0.076
#0647 401.3' BR 0.000 0.076
0.190 1 - 16" X 150' CC
0.227 1 - 60" X 480' CC
0.222 #0644 47.5' UP 0.231
0.277 1 - 16" X 150' CC
0.434 #0643 63.4' UP 0.446
0.640 1 - 8' X 6' X 999' CBC
0.885 1 - 24" X 150' CC
1.073 1 - 24" X 164' CC
1.054 #0600 42.2' UP 1.062
1.067 #1001 47.5' UP 1.076
1.110 1 - 24" X 150' CC
1.404 1 - 24" X 164' CC
1.456 #0604 89.8' UP 1.473
1.490 1 - 24" X 154' CC
1.500 1 - 4' X 4' X 150' CBC

TRAFFIC DATA

AADT= 112,000 D= 52.90
K= 8.50 T= 4.70 — All Traffic Data as of 12-31-12

SIS

0.000 SIS CORRIDOR

FUN CLASS

0.000 URBAN INTERSTATE
NHS

SPEED LIMIT

0.000 60MPH
70MPH
0.719 70MPH
70MPH

● = SIGNALIZED INTERSECTION

2.0 — 3.0

MIAMI - DADE COUNTY

ROADWAY FEATURES

1.500 INSIDE URBAN, OUTSIDE CITY
MIAMI
I-75
SR 93
I 75
OFF RAMP 87075603 A 1.794
ON RAMP 87075602
ON RAMP 87075602 A 2.077
NW 154 ST

LANE WIDTHS ARE AVERAGED

1.507
298.0' - 96.0'
8 - 12.0' RDWY
170.0 LWN W/ GRD MED
2 - 10.0' WARN INSHLD I
2 - 10.0' WARN SHLD I
12.0' LWN SHLD2 - RT

1.500
300.0' - 96.0'
8 - 12.0' RDWY
170.0 LWN W/ GRD MED
2 - 10.0' WARN INSHLD I
10.0' WARN SHLD I - LT
12.0' WARN SHLD I - RT
12.0' LWN SHLD2 - LT

1.794
310.0' - 96.0'
8 - 12.0' RDWY
170.0 LWN W/ GRD MED
2 - 10.0' WARN INSHLD I
10.0' PVD SHLD I - LT
10.0' WARN SHLD I - RT
2 - 12.0' LWN SHLD2

2.077
320.0' - 96.0'
8 - 12.0' RDWY
170.0 LWN MED
2 - 10.0' WARN INSHLD I
10.0' PVD SHLD I - LT
20.0' PVD SHLD I - RT
2 - 12.0' LWN SHLD2

2.287
312.0' - 96.0'
8 - 12.0' RDWY
170.0 LWN MED
2 - 10.0' WARN INSHLD I
10.0' WARN SHLD I - LT
12.0' PVD SHLD I - RT
2 - 12.0' LWN SHLD2

2.425
312.0' - 96.0'
8 - 12.0' RDWY
170.0 LWN/GR MED
2 - 10.0' WARN INSHLD I
10.0' WARN SHLD I - LT
12.0' PVD SHLD I - RT
2 - 12.0' LWN SHLD2

2.557
312.0' - 96.0'
8 - 12.0' RDWY
170.0 LWN MED
2 - 10.0' WARN INSHLD I
10.0' WARN SHLD I - LT
12.0' PVD SHLD I - RT
2 - 12.0' LWN SHLD2

2.739
310.0' - 96.0'
8 - 12.0' RDWY
170.0 LWN MED
2 - 10.0' WARN INSHLD I
2 - 10.0' WARN SHLD I
2 - 12.0' LWN SHLD2

ROADWAY COMPOSITION

1.500 28/FC-5
28/FC-5

HORIZONTAL ALIGNMENT

PC=1.198
PI=1.545
PT=1.751
Δ=87°40'58.00"
D=3°0'
B=N02°37'10"W

STRUCTURE DESCRIPTION

1.500 1 - 4' X 4' X 150' CBC
1.540 1 - 16" X 150' CC
1.642 2 - 24" X 150' CC - LT
1 - 30" X 158' CC - RT
1.719 1 - 24" X 151' CC
1.726 #0605 58.1' UP 1.737
1.841 1 - 24" X 150' CC - LT
1 - 24" X 150' CC - RT
1.990 1 - 24" X 150' CC
2.106 1 - 24" X 150' CC - LT
1 - 24" X 180' CC - RT
2.389 1 - 24" X 150' CC - LT
1 - 24" X 150' CC - RT
2.466 #0599 42.2' UP 2.474
2.635 1 - 30" X 200' CC - LT
1 - 24" X 150' CC - RT
2.900 1 - 24" X 150' CC - LT
1 - 30" X 150' CC - RT

TRAFFIC DATA

AADT= 112,000 D= 52.90
K= 8.50 T= 4.70 — All Traffic Data as of 12-31-12

SIS

1.500 SIS CORRIDOR

FUN CLASS

1.500 URBAN INTERSTATE
NHS

SPEED LIMIT

1.500 70MPH
70MPH

A=ASPHALT
B=BRICK
C=CONCRETE
O=OTHER

	5 YR INV	SLD REV	INTERIM REVISIONS BMP	EMP	INV	SLD REV
DATE	06/27/11	07/12/11				
BY	URS	URS				

STRAIGHT LINE DIAGRAM OF ROAD INVENTORY

FLORIDA DEPARTMENT OF TRANSPORTATION

INT. OR US ROUTE NO	STATE ROAD NO.	COUNTY	DISTRICT	ROADWAY ID	SHEET
I 75	SR 93	MIAMI-DADE	6	87075000	NO. 2 OF. 2

3

MIAMI - DADE COUNTY

4

ROADWAY FEATURES

LANE WIDTHS ARE AVERAGED

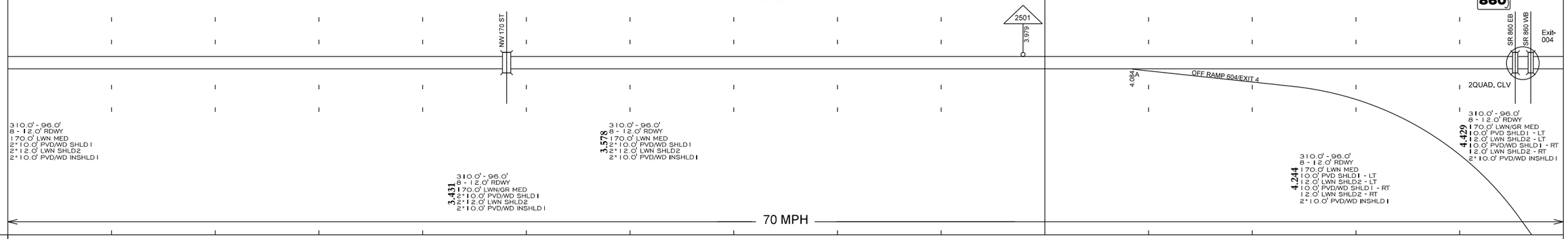

ROADWAY COMPOSITION	28/FC-5 28/FC-5
HORIZONTAL ALIGNMENT	
STRUCTURE DESCRIPTION	3.147 1-24" X 150' CC 1-36" X 150' CC 3.318 1-24" X 150' CC 1-24" X 150' CC 3.442 1-4' X 4' X 400' CBC 3.477 0596 42' UP 3.485 3.527 1-24" X 150' CC 1-24" X 150' CC 3.641 1-24" X 150' CC 1-24" X 150' CC 3.754 1-24" X 150' CC 1-24" X 150' CC 3.868 1-24" X 150' CC 1-24" X 150' CC 3.981 1-24" X 150' CC 1-24" X 150' CC 4.094 1-24" X 150' CC 1-24" X 150' CC 4.209 1-24" X 150' CC 2-24" X 150' CC 4.451 0595 26' UP 4.466 4.486 0594 26' UP 4.471
TRAFFIC DATA	AADT= 110,000 D= 52.35 K= 8.28 T= 3.81 — All Traffic Data as of 12-31-10
SIS	SIS HIGHWAY FACILITY
FUNCTIONAL CLASSIFICATION	URBAN PRINCIPAL ARTERIAL – INTERSTATE NHS

● = SIGNALIZED INTERSECTION

5

MIAMI-DADE COUNTY

RURAL MIAMI-DADE COUNTY

ROADWAY FEATURES

LANE WIDTHS ARE AVERAGED

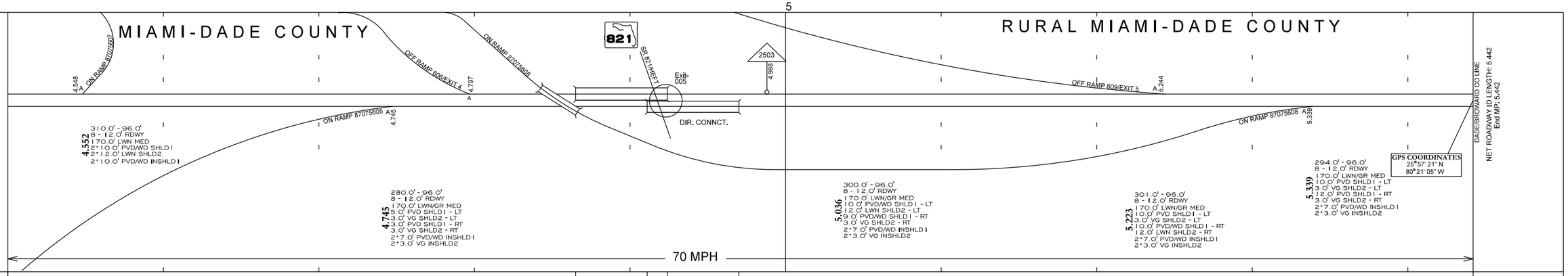

ROADWAY COMPOSITION	28/FC-5 28/FC-5 4.865 8 28/FC-5 4.911 8 8 4.924 28/FC-5 8 4.970 28/FC-5 28/FC-5
HORIZONTAL ALIGNMENT	
STRUCTURE DESCRIPTION	4.530 1-24" X 150' CC 1-24" X 150' CC 4.820 1-16" X 150' CC 4.842 0602 47' UP 4.851 4.865 0597 311' BR 4.924 4.910 0602 89' UP 4.927 4.911 0598 311' BR 4.970 4.980 1-16" X 150' CC 5.064 1-24" X 150' CC 5.150 1-16" X 150' CC 5.235 1-16" X 150' CC 5.240 1-16" X 150' CC 5.310 1-16" X 150' CC 5.385 1-16" X 150' CC 5.405 1-16" X 150' CC
TRAFFIC DATA	AADT= 110,000 D= 52.35 K= 8.28 T= 3.81 — All Traffic Data as of 12-31-10 4.894 AADT= 148,000 D= 52.35 K= 8.28 T= 3.81
SIS	SIS HIGHWAY FACILITY SIS HIGHWAY FACILITY 5.442
FUNCTIONAL CLASSIFICATION	URBAN PRINCIPAL ARTERIAL – INTERSTATE NHS